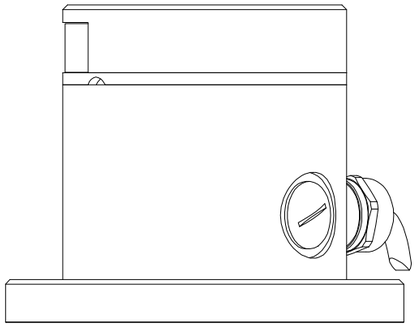

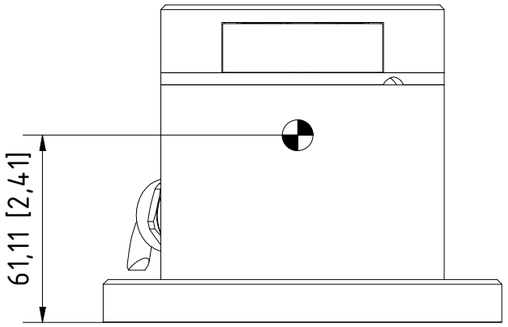

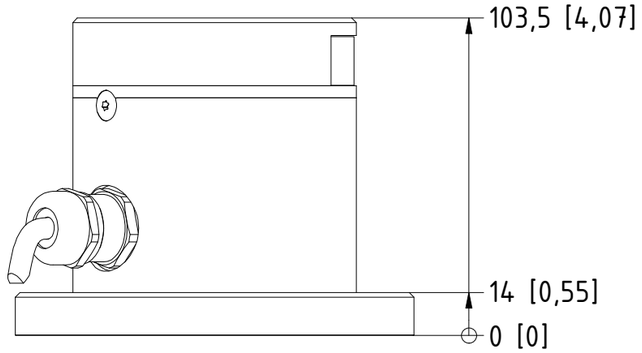

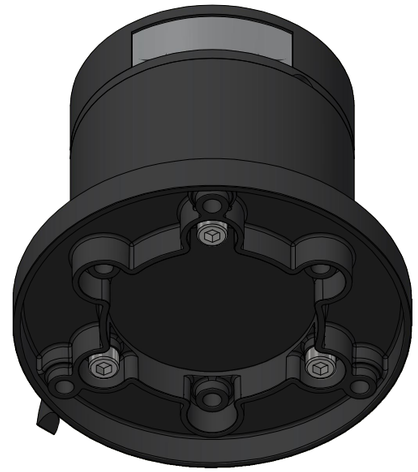



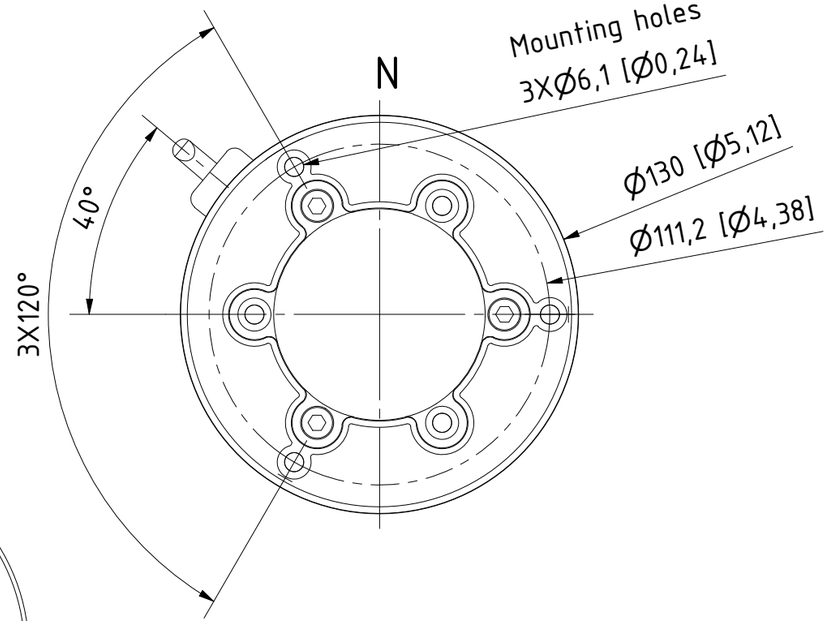

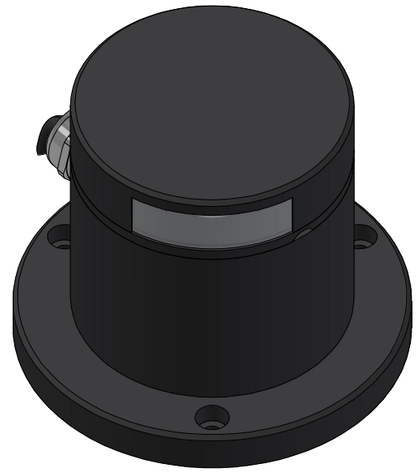

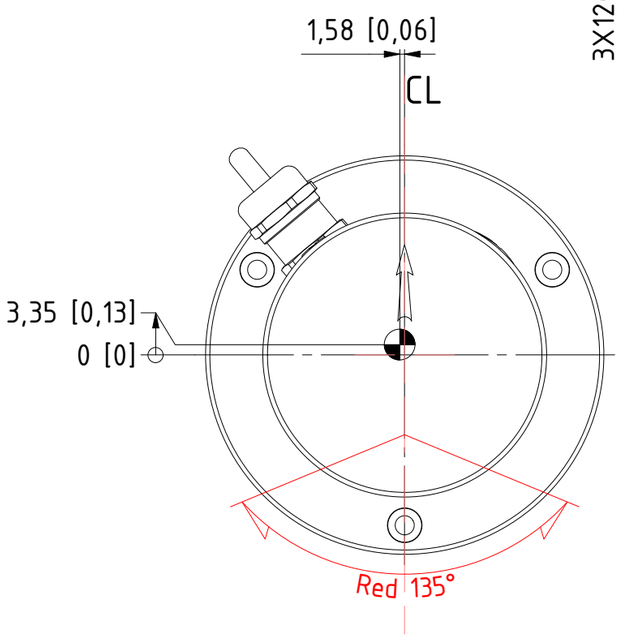

Dimensions: Millimetres [Inches]
Estimated weight:0,72 kg (1,6 lbs)

TITLE:
301-141S-PRO-I
3nm 135° Red, Polar stop light, 2Hz flash, black
On a 400-404 PE base plate, Cable Side

DRAWING No.:				Sheet No.:	DRAWN BY:
301-141S-PRO-I				1	LSA
SCALE:	SIZE:	REV. NO.:	TOLERANCES:	REVIEWED BY:	CREATION DATE:
1 : 2	A3		DS/ISO 2768-f		23-04-2024

MATERIAL DESCRIPTION:
Alu. EN6082, Acrylic, POM, PE
(20µ) Silver anodized according to EN ISO 7599
(50µ) Black anodized according to MIL-A 8625F

This Drawing, and the information within, is the property of Lopolight ApS and may not be used in any form without express permission there from. Lopolight reserves the right to change this drawing and assumes no liability for the information communicated herein. Use of dimensions and other information in this drawing is at the users own risk.

LOPOLIGHT
Lopolight ApS
Bakkegaardsvej 513
DK-3050, Humlebaek
Denmark
www.lopolight.com

Tel:(+45) 32 48 50 30
info@lopolight.com

50MM AT A3

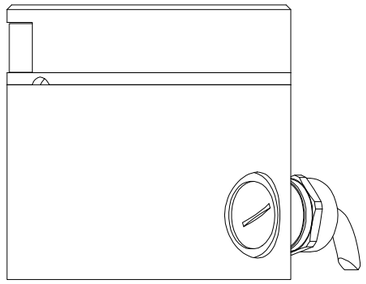

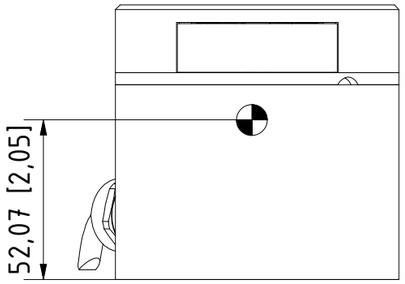

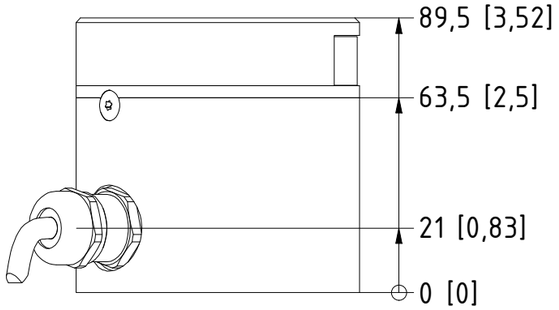

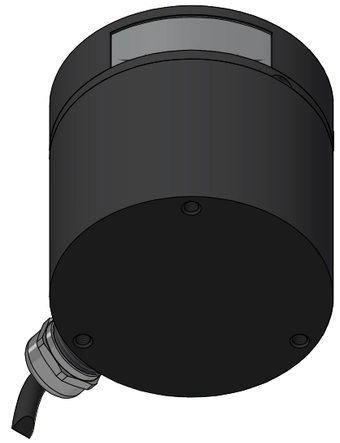

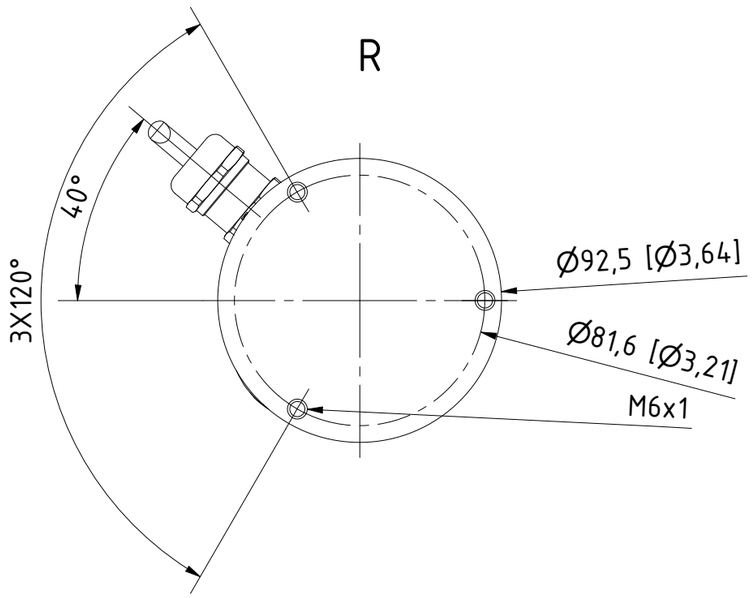

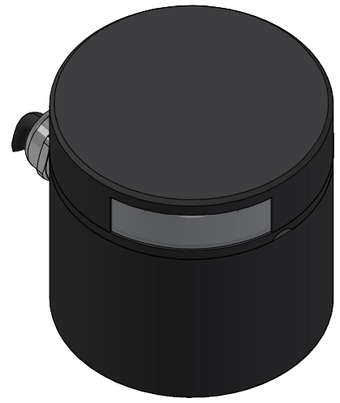

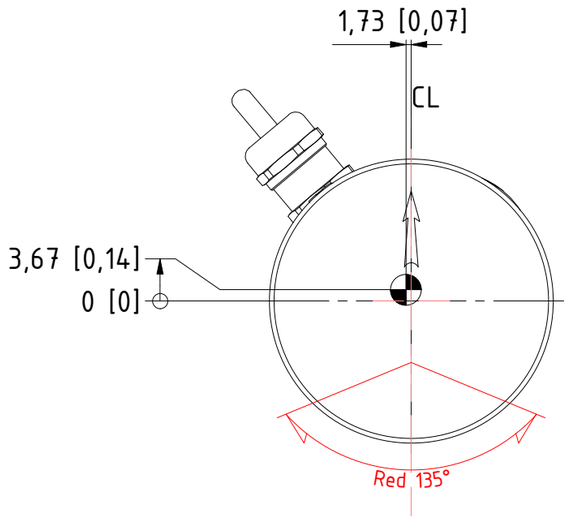

Dimensions: Millimetres [Inches]
Estimated weight:0,66 kg (1,46 lbs)

TITLE:
301-141S-PRO-I
3nm 135° Red, Polar stop light, 2Hz flash, black

DRAWING No.:					Sheet No.:	DRAWN BY:
301-141S-PRO-I					2	LSA
SCALE:	SIZE:	REV. NO.:	TOLERANCES:	REVIEWED BY:	CREATION DATE:	
1 : 2	A3		DS/ISO 2768-f		23-04-2024	

MATERIAL DESCRIPTION:
Alu. EN6082, Acrylic, POM
(20µ) Silver anodized according to EN ISO 7599
(50µ) Black anodized according to MIL-A 8625F

This Drawing, and the information within, is the property of Lopolight ApS and may not be used in any form without express permission there from. Lopolight reserves the right to change this drawing and assumes no liability for the information communicated herein. Use of dimensions and other information in this drawing is at the users own risk.

LOPOLIGHT
Lopolight ApS
Bakkegaardsvej 513
DK-3050, Humlebaek
Denmark
www.lopolight.com

Tel:(+45) 32 48 50 30
info@lopolight.com

50MM AT A3