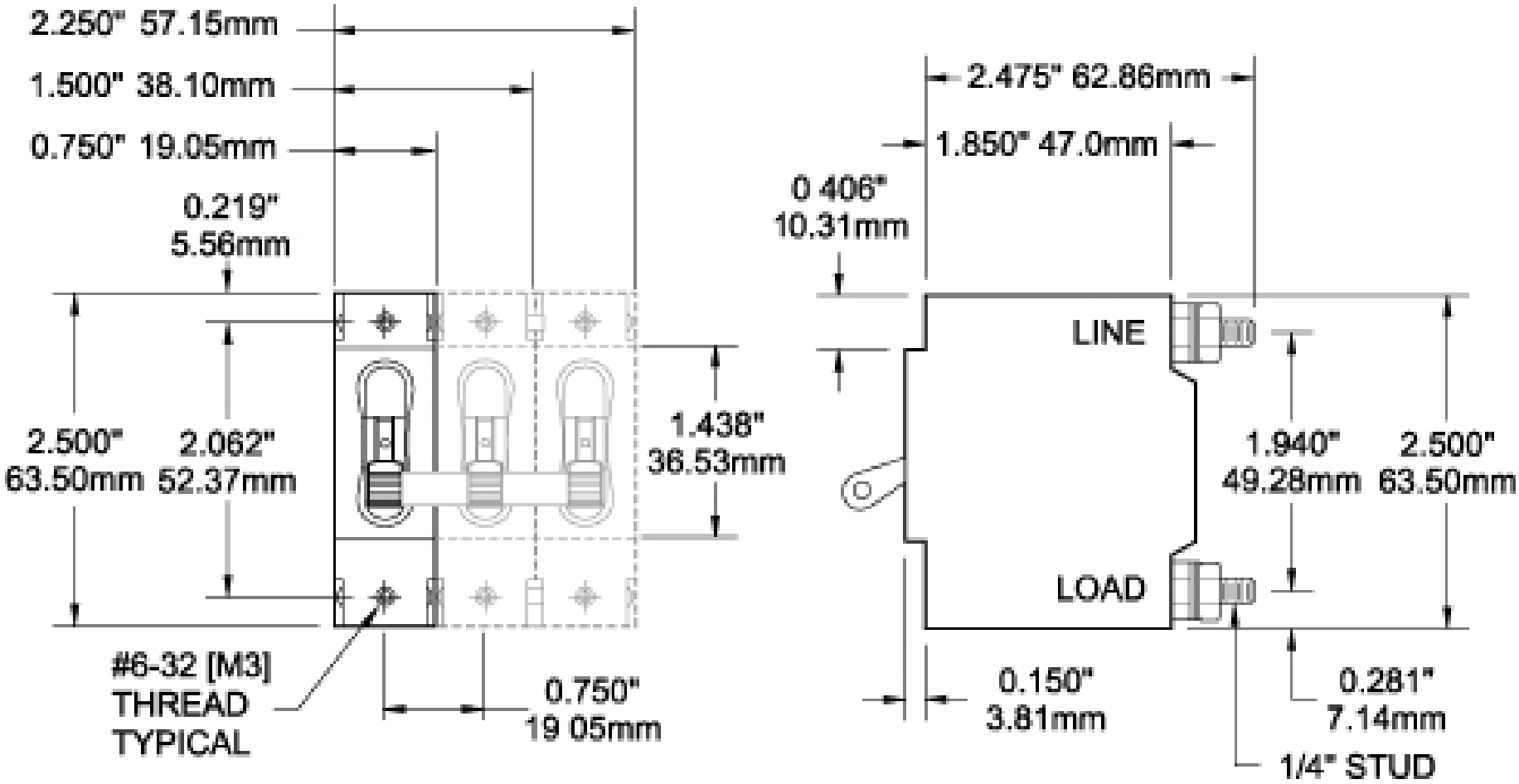
2.250" 57.15mm
1.500" 38.10mm
0.750" 19.05mm
0.219"
5.56mm
2.500"
63.50mm
2.062"
52.37mm
1.438"
36.53mm
#6-32 [M3]
THREAD
TYPICAL
0.750"
19 05mm
2.475" 62.86mm
1.850" 47.0mm
0 406"
10.31mm
LINE
LOAD
1.940"
49.28mm
2.500"
63.50mm
0.150"
3.81mm
0.281"
7.14mm
1/4" STUD