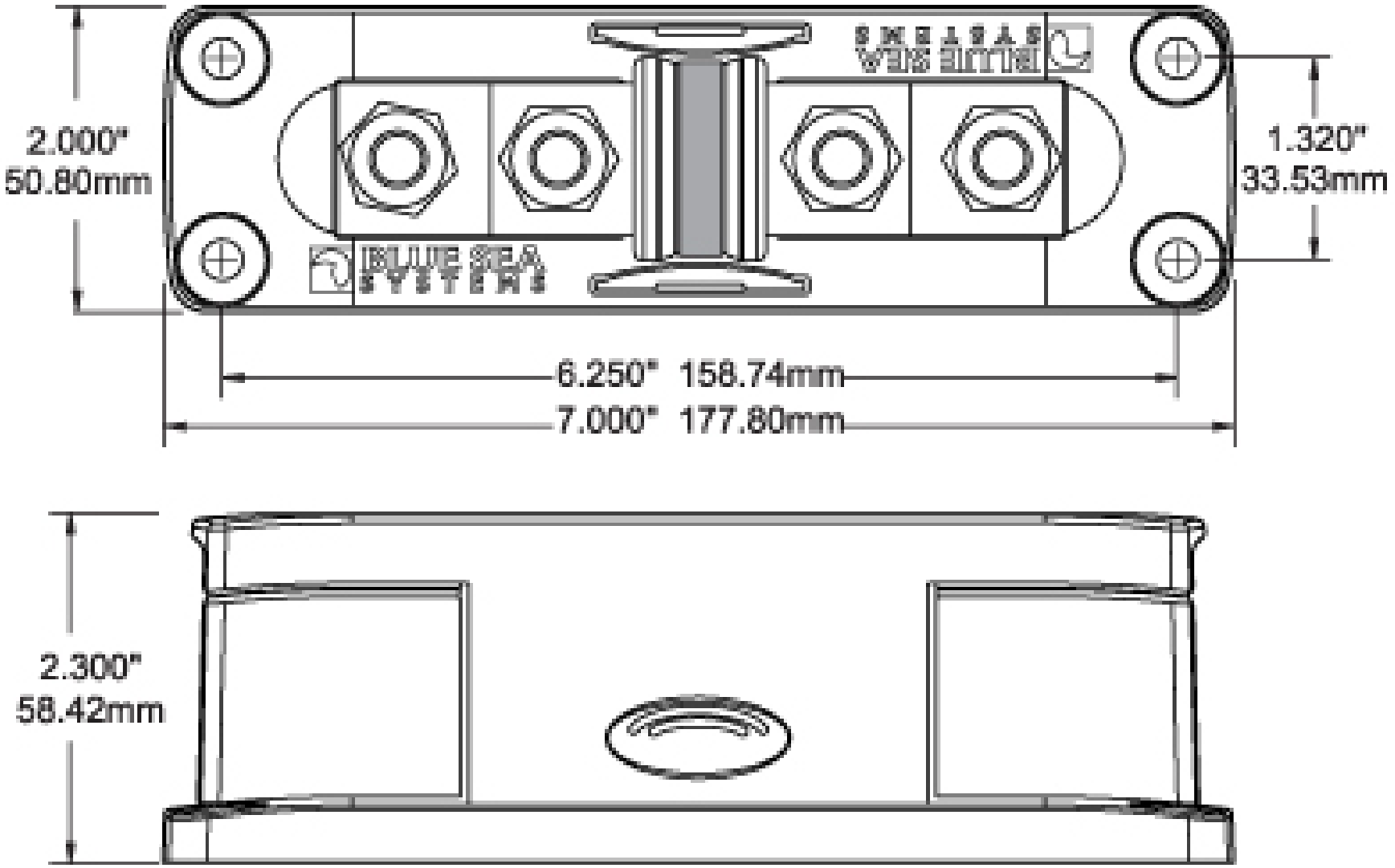
2.000"
50.80mm
1.320"
33.53mm
6.250" 158.74mm
7.000" 177.80mm
2.300"
58.42mm